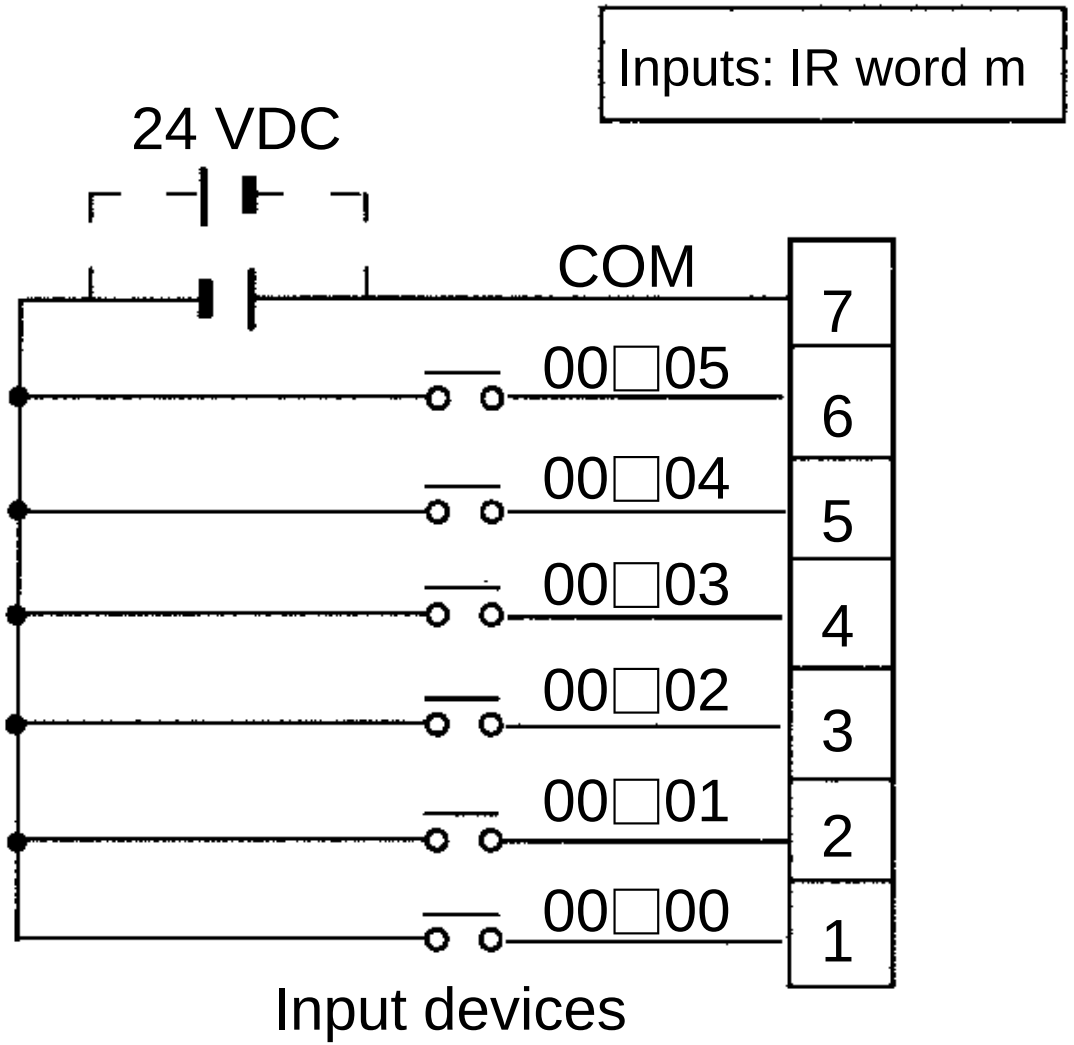Expansion I/O Unit with 10 I/O Points: CPM2C-10EDR