DRT1-ID32ML

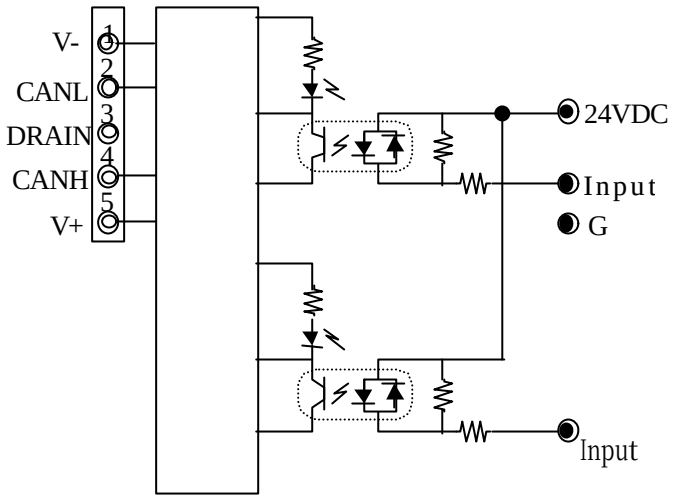
V-
CANL
DRAIN
CANH
V+
1
2
3
4
5
24VDC
Input
G
Input

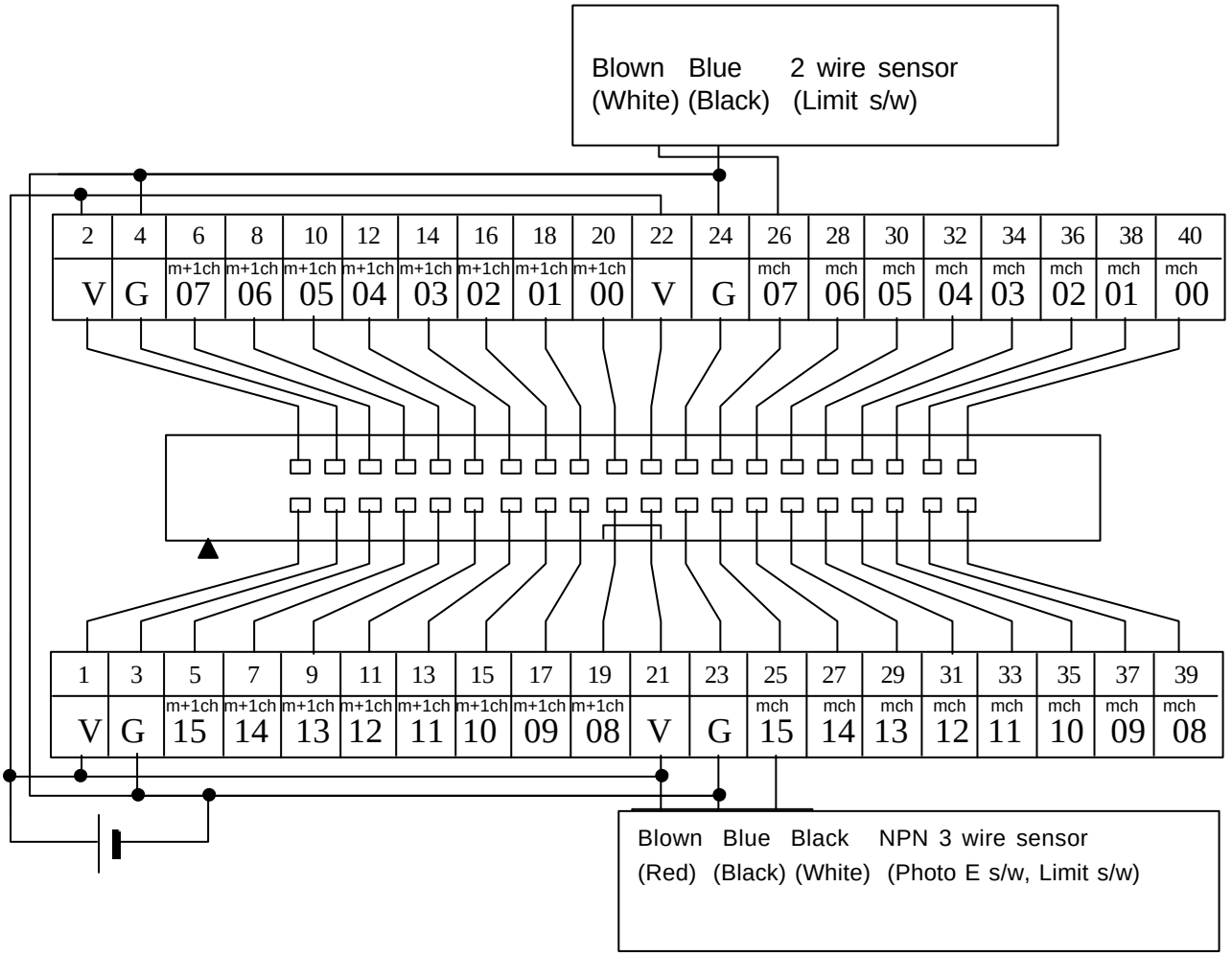
Blown (White) Blue (Black) 2 wire sensor (Limit s/w)
2 4 6 8 10 12 14 16 18 20 22 24 26 28 30 32 34 36 38 40
V G m+1ch 07 m+1ch 06 m+1ch 05 m+1ch 04 m+1ch 03 m+1ch 02 m+1ch 01 m+1ch 00 V G mch 07 mch 06 mch 05 mch 04 mch 03 mch 02 mch 01 mch 00
1 3 5 7 9 11 13 15 17 19 21 23 25 27 29 31 33 35 37 39
V G m+1ch 15 m+1ch 14 m+1ch 13 m+1ch 12 m+1ch 11 m+1ch 10 m+1ch 09 m+1ch 08 V G mch 15 mch 14 mch 13 mch 12 mch 11 mch 10 mch 09 mch 08
Blown (Red) Blue (Black) Black (White) NPN 3 wire sensor (Photo E s/w, Limit s/w)