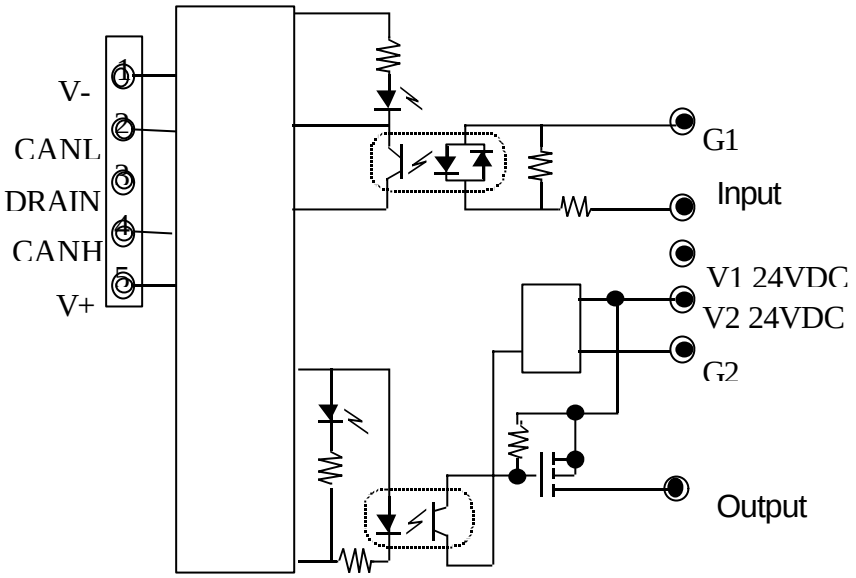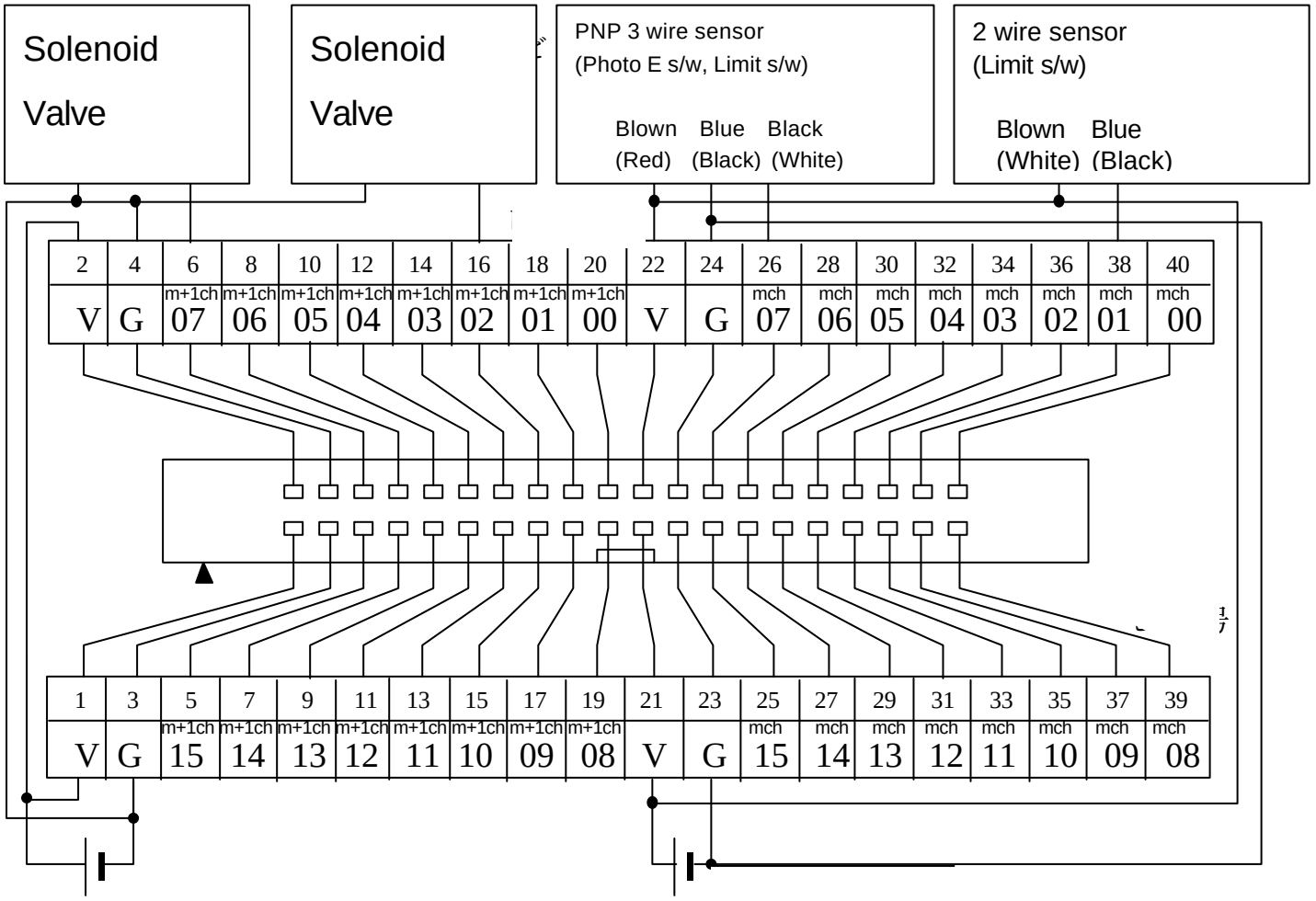DRT1-MD32ML-1